Model/型番:FT05

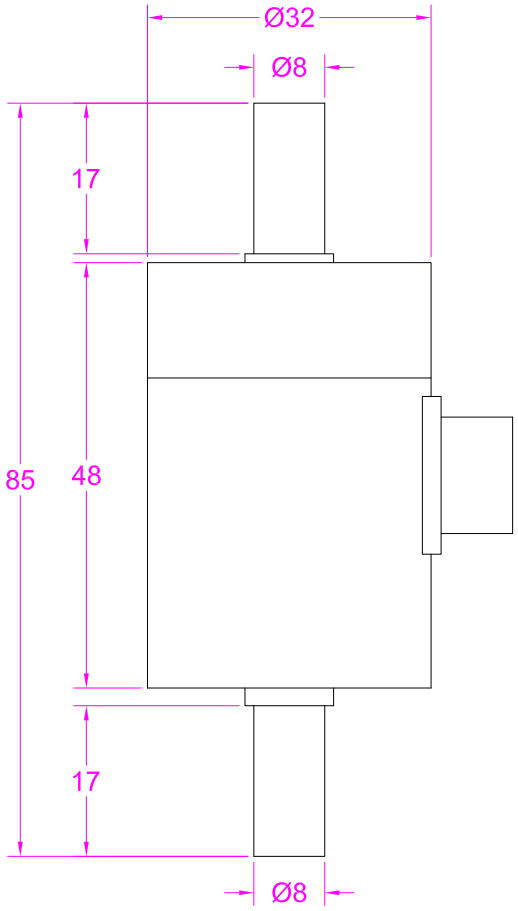

Torque direction
荷重方向

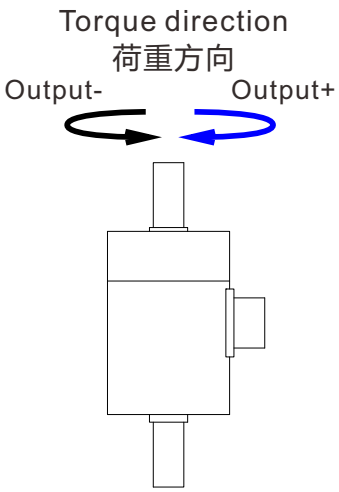

Ordering code

FT05 - 1NM

Model Capacity

Wiring Diagram/配線図

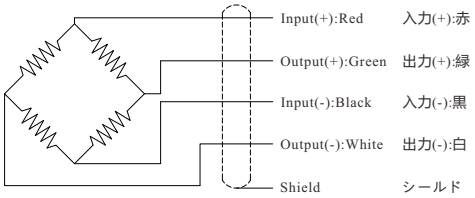

--- Specifications / 仕様 ---

P-1/2

Capacity/定格容量	0.1/0.2/0.3/0.5/1/2/3/5NM		
Rated Output 定格出力	1.0 mV/V	Compensated Temp. 温度補償範囲	−10...+40°C
Excitation 供給電圧	3~15V	Operating Temp. 動作温度範囲	−20...+60°C
Zero Balance 零バランス	±0.05mV/V	Temp. Shift Zero 零点の温度影響	±0.02% of R.O./°C
Nonlinearity 非直線性	±0.2% of R.O.	Temp. Shift Span 出力の温度影響	±0.02% of R.O./°C
Hysteresis ヒステリシス	±0.2% of R.O.	Input Resistance 入力抵抗	0.1~0.5Nm: 1000±50Ω 1~5Nm: 380±30Ω
Nonrepeatability 繰り返し性	±0.1% of R.O.	Output Resistance 出力抵抗	0.1~0.5Nm: 1000±50Ω 1~5Nm: 350±5Ω
Creep(10min) クリープ(10min)	±0.1% of R.O.	Insulation Resistance 絶縁抵抗	>2000MΩ(50V)
Safe Overload 許容過負荷	150% of F.S.	Ingress Protection 防塵防水	IP50
Ultimate Overload 限界過負荷	200% of F.S.	Material of Element 起歪体の材質	Stainless steel ステンレス鋼
Cable ケーブル	Ø5*3000mm 4-core shielded cable with mating connector Ø5*3000mm 4芯シールドケーブル		
R.O.=Rated Output/定格出力 F.S.=Full Scale/フルスケール			

• Subject to change without notice / 予告なしに変更されることが

Custom torque sensor

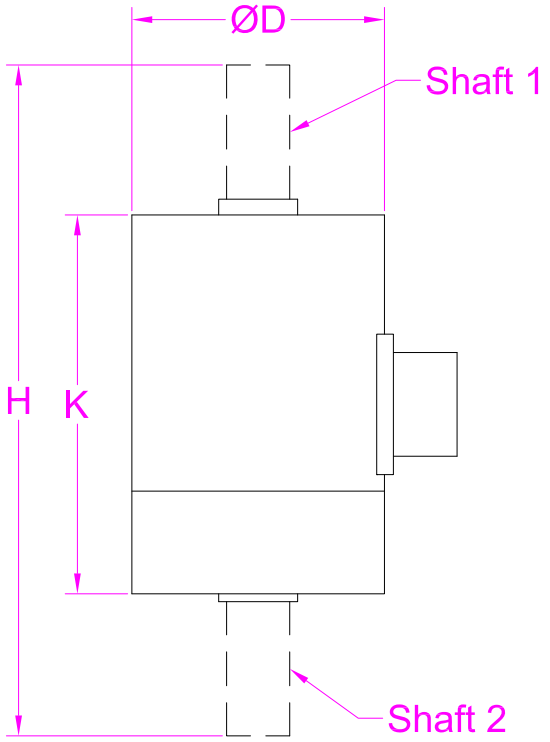

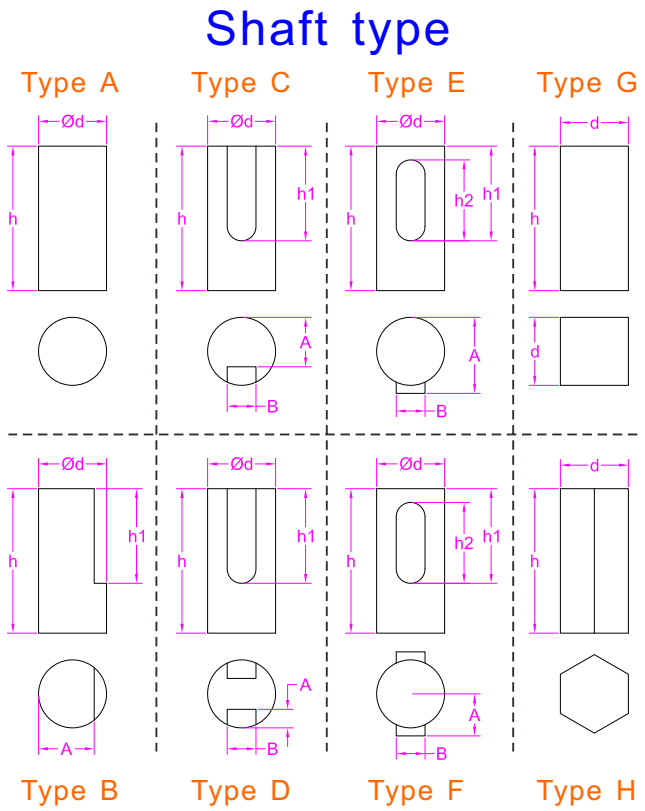

P-2/2

Capacity(NM)			Quantity		
H		K		D	
Shaft 1 type					
d		h		h1	
h2		A		B	
Shaft 2 type					
d		h		h1	
h2		A		B	
Other Requirement					

- For dimensions that don't matter,please fill in "Given by design" or acceptable range like "25~40mm".
- Drawings provided by clients are also welcome.
- Forsentek will evaluate the feasibility upon the given parameters and propose modifications accordingly to make it work.